• ERC 60-10/C TYPE

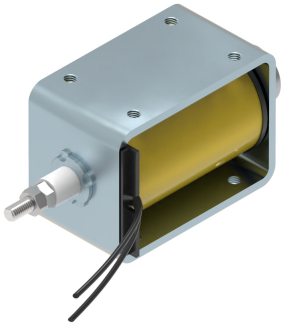

Protection rate: **IP00**
Insulation class: **B (130ºC)**
Reference cycle: **5 minutes**
Standard stroke (s): **10 mm**
Temperature rise "ΔV_{31}": **70ºC**
Working temperature: **-10 to 45ºC**
Work: **Push / Pull**

Release spring will be incorporated by defect

Standard spring force:
Fs(s=0mm) = 4.3N
Fs(s=10mm) = 3.2N

(ED) Duty-cycle ED(%)	100	40	25	15	5
(P20) Power at 20ºC (W)	18	45	70	110	280
(Fm) Solenoid force (N) 1)	19	33	43	56	94
Max time under voltage(s)	Inf	120	75	45	15
Opening time (ms) 2)	182	130	122	107	104
Release time (ms) 3)	117	85	81	72	70
Plunger weight (Kg)	0.120				
Solenoid weight (Kg)	0.660				

1) Fm Solenoid force is given acording to VDE0580 without deducting the spring force or the plunger weight if vertical mounting.

2) Time is given on these conditions: Coil supplied under nominal voltage ; Stabilized in it´s working temperature ; Load 70% of the solenoid force ; Horizontal assembly ; Standard stroke initial position; 20ºC ambient temperature.

3) Time is given on these conditions: Standard spring ; without load on shaft ; Horizontal assembly ; Standard stroke initial position.

Duty-cycle ED%	Standard voltages									Under demand			
	VDC							VAC		VDC		VAC	
	6	12	24	48	100	125	205	110	230	Min	Max	Min	Max
100	x	o	o	o	o	o	o	o	o	7	230	48	230
40	x	o	o	o	o	o	o	x	o	11	230	125	230
25	x	x	o	o	o	o	o	x	o	13	230	200	230
15	x	x	o	o	o	o	o	x	x	16	230	x	x
5	x	x	o	o	o	o	o	x	x	24	230	x	x

Layout: o = Available ; x = Unavailable

- Voltage under demand:
They can be manufactured at voltages between the maximum and minimum voltage values shown in the chart.

- To feed in alterning current the solenoid will have a rectifier incorporated in the coil.

- The duty cycles described in the chart are standard, they can be manufactured in any intermediate value.

- If any customization from the original is needed, please ask us.

- Earthing is recommended if the metallic parts are accessible.

Ordering code: *ERC60-10/C --V ED---% - Spring*

Voltage: 24Vdc; Duty cycle: ED100%; With spring:
ERC60-10/C 24Vdc ED100% RS

Voltage: 48Vdc; Duty cycle: ED15%; Without spring:
ERC60-10/C 48Vdc ED15% RN

Spring yes: RS ; Spring no: RN

Solenoid under voltage (s=0mm position)

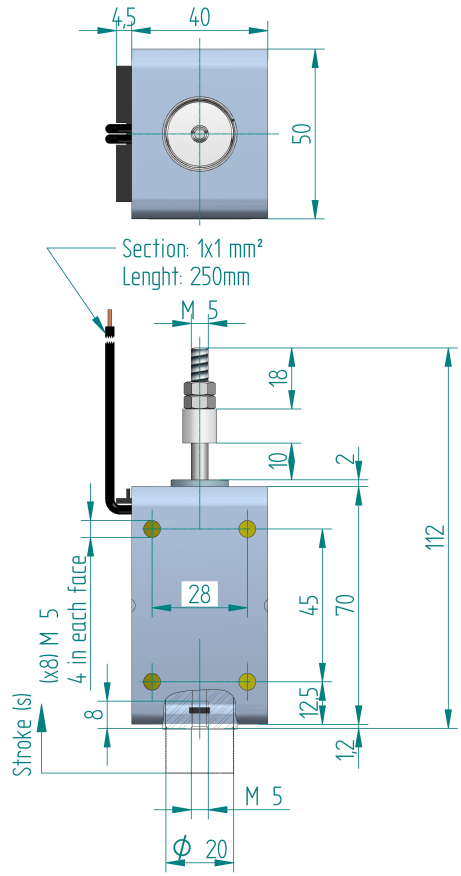

Force-stroke curve

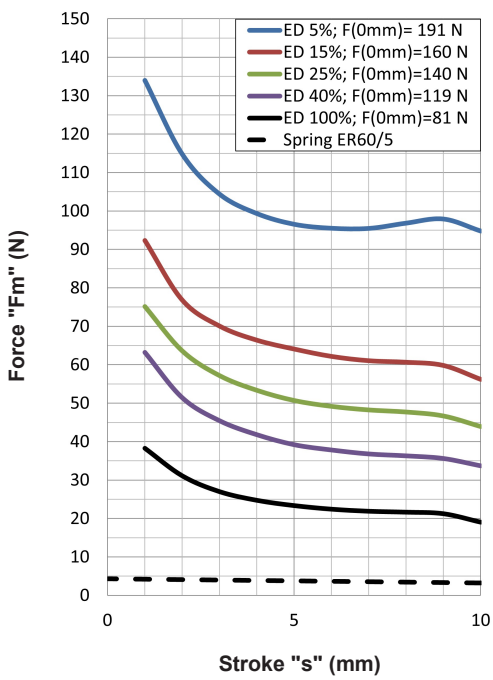

Calculation of the effective force:
see pages 1 and 31

For fixation and mounting positions: see page 31