• ERC 50-15/C TYPE

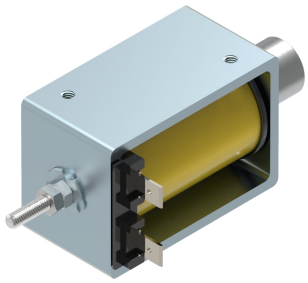

Protection rate: **IP00**
Insulation class: **B (130ºC)**
Reference cycle: **3 minutes**
Standard stroke (s): **15 mm**
Temperature rise "ΔV_{31}": **70ºC**
Working temperature: **-10 to 45ºC**
Work: **Push / Pull**

Cables version:
• ERC50-15/CC

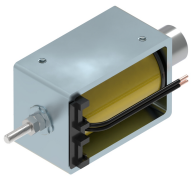

s= 1x0.5mm²
L= 250mm

Release spring will be incorporated by defect

Standard spring force:
Fs(s=0mm) = 3.6N
Fs(s=15mm) = 1.7N

Solenoid under voltage (s=0mm position)

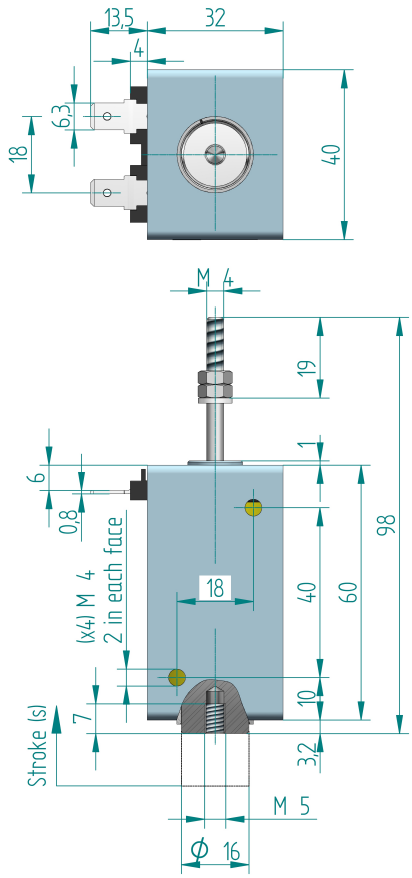

(ED) Duty-cycle ED(%)	100	40	25	15	5
(P20) Power at 20ºC (W)	14	35	56	93	280
(Fm) Solenoid force (N) 1)	6.8	12.8	17	23	43
Max time under voltage(s)	Inf	72	45	27	9
Opening time (ms) 2)	122	91	76	73	71
Release time (ms) 3)	80	62	53	51	50
Plunger weight (Kg)	0.070				
Solenoid weight (Kg)	0.335				

1) Fm Solenoid force is given acording to VDE0580 without deducting the spring force or the plunger weight if vertical mounting.

2) Time is given on these conditions: Coil supplied under nominal voltage ; Stabilized in it´s working temperature ; Load 70% of the solenoid force ; Horizontal assembly ; Standard stroke initial position; 20ºC ambient temperature.

3) Time is given on these conditions: Standard spring ; without load on shaft ; Horizontal assembly ; Standard stroke initial position.

Duty-cycle ED%	Standard voltages									Under demand			
	VDC							VAC		VDC		VAC	
	6	12	24	48	100	125	205	110	230	Min	Max	Min	Max
100	o	o	o	o	o	o	o	o	o	6	230	41	230
40	x	o	o	o	o	o	o	o	o	9	230	100	230
25	x	o	o	o	o	o	o	x	o	11	230	160	230
15	x	x	o	o	o	o	o	x	o	15	230	230	230
5	x	x	o	o	o	o	o	x	x	24	230	x	x

Layout: o = Available ; x = Unavailable

- Voltage under demand:
They can be manufactured at voltages between the maximum and minimum voltage values shown in the chart.

- To feed in alterning current the solenoid will have a rectifier incorporated in the coil.

- The duty cycles described in the chart are standard, they can be manufactured in any intermediate value.

- If any customization from the original is needed, please ask us.

- Earthing is recommended if the metallic parts are accessible.

Ordering code: *ERC50-15/C --V ED---% - Spring*

Voltage: 24Vdc; Duty cycle: ED100%; With spring:
ERC50-15/C 24Vdc ED100% RS

Voltage: 48Vdc; Duty cycle: ED15%; Without spring:
ERC50-15/C 48Vdc ED15% RN

Spring yes: RS ; Spring no: RN

Force-stroke curve

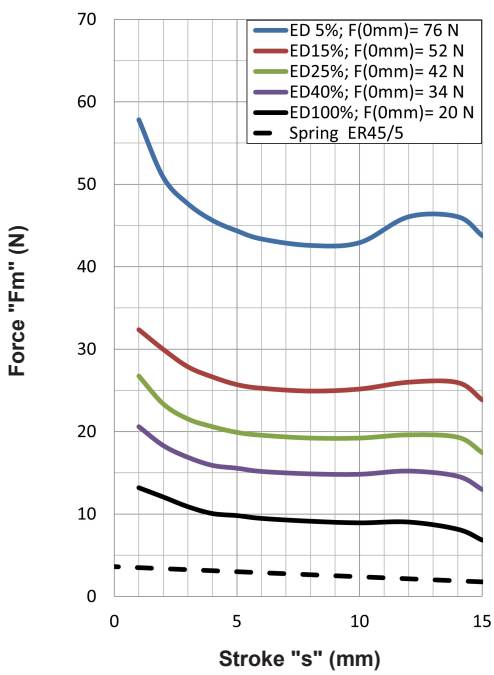

Calculation of the effective force:
see pages 1 and 31

For fixation and mounting positions: see page 31